TS - 14 Graver Foam Seal / TS - 15 Everseal Foam Filled Seal

Land & Marine

TANKSERV

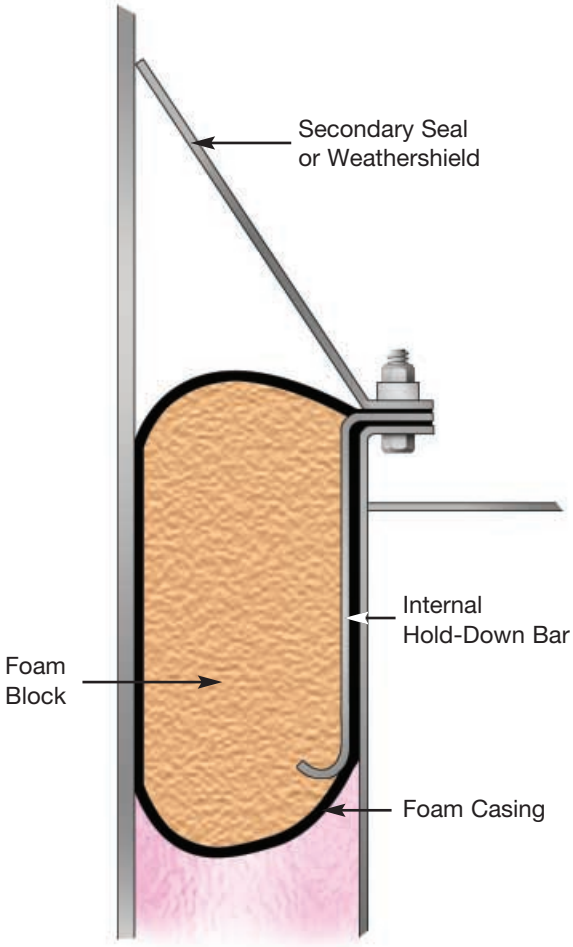

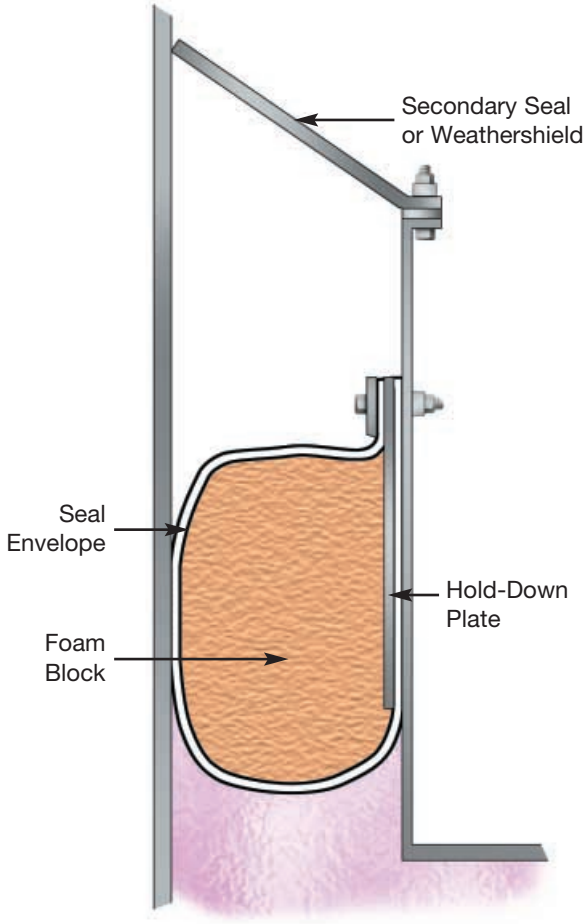

TS - 14 Foam Seal
TS - 15 Everseal Filled Seal

With the exception of waxy crude oil, the Graver foam seal is used throughout the whole range of crudes and refined products. The seal can be mounted either in contact with the liquid or above the liquid (vapour mounted).

The TS - 14 can be used on rim gaps varying in size from 100mm to 250mm while coping with the commensurate shell deviations throughout. The seal can also be designed to suit internal floating pan decks.

The TS - 15 from TankServ is a product mounted foam seal for use on both external floating roofs and internal pan decks of all practical tank sizes. Crude oils, excepting waxy crudes and a wide spread of refined products, may be serviced by the TS - 15 seal.

Rim gaps of between 100mm and 200mm (nominal) can be accommodated.

Provided by the experienced team from Land & Marine TankServ

www.landandmarine.com

TS - 14 Graver Foam Seal / TS - 15 Everseal Foam Filled Seal

TS14 - Graver Foam Description

This seal is similar to the TS - 9 as both comprise tough, polymer coated envelopes surrounding compressible polyurethane foam; however, in this case the foam is octagonal in cross section.

The actual size of the foam is calculated from consideration of the nominal rim gap and shell deviations.

Movement of the foam in a vertical direction is controlled by internal hold-down plates. However, the foam is not fixed to the hold-down plates.

Materials of Construction

- **envelope:** TS - 131 PVC/nitrile for up to 75% aromatics
  TS - 321 polyurethane for up to 100% aromatics
- **foam logs:** polyurethane foam
- **hold-down plates:** mild steel, natural finish

Installation/Maintenance

Access is only required from the top of the roof which is advantageous in site conditions.

Weathershield/Secondary Seal

A weathershield is recommended to protect the seal; however, even greater benefits can be obtained by fitting a secondary seal from the Servaseal range.

TS15 - Everseal Foam Description

The TS - 15 is a foam log seal with a highly scuff resistant polymer coated nylon envelope. Hold-down bars maintain the seal in position while the floating roof is descending.

Mounting arrangements for this seal do not follow the usual methods of suspension from the top of the roof rim. Instead, the TS - 15 employs a stud bar, ie. a steel strip having projecting studs welded to the floating roof rim plate at a position part way down the plate from which the seal can achieve contact with the stored liquid.

The stud bar, if not already fitted to a tank, would require hot work in any retrofitting and must obviously be given consideration.

This is also a high efficiency seal.

Materials of Construction

- **metal parts:** mild steel, natural finish
- **foam logs:** polyurethane
- **envelope:** TS - 131 for up to 75% aromatics
  TS - 321 for up to 100% aromatics

Installation/Maintenance

On new roofs, the stud bar will be welded in place and thereafter access is only required from the roof topside.

Weathershield/Secondary Seal

A weathershield is almost essential; however, even greater benefits are to be obtained by fitting a secondary seal from the Servaseal range.

Safety Note:

Before carrying out hot work in any tank fitted with a foam seal, the seal should be removed to a safe place since its cellular structure may remain impregnated with hydrocarbon even after tank cleaning operations.

Land & Marine
TANKSERV

Land and Marine Project Engineering Ltd
Dock Road North, Bromborough,
Wirral CH62 4LN United Kingdom
T. +44 (0)151 641 5600
F. +44 (0)151 644 9990
E. company@landandmarine.com
W. www.landandmarine.com

For more details on this and other products visit:

www.landandmarine.com

Product & Services Available From TankServ - DOWNLOAD FROM WEBSITE

- TS - 1 Mechanical Primary Seal
- TS - 1L Lightweight Mechanical Primary Seal
- TS - 5 & TS - 6 Liquid Filled Seal
- TS - 7 & TS - 9 Foam Filled Seal
- TS - 14 Foam Filled Seal
- TS - 16 Servaseal Secondary Seals
- TS - 16 Servaseal Double Seals
- TS - 32 Servaseal Secondary Seals
- TS - 32 Servaseal Double Seals
- Guidepole Sleeves & Vapour Leg Socks
- Internal Floating Covers
- Geodesic Dome Roof
- Roof Drain Systems
- Floating Suction Units
- Tank Accessories